REV	DESCRIPTION	DATE	APPR

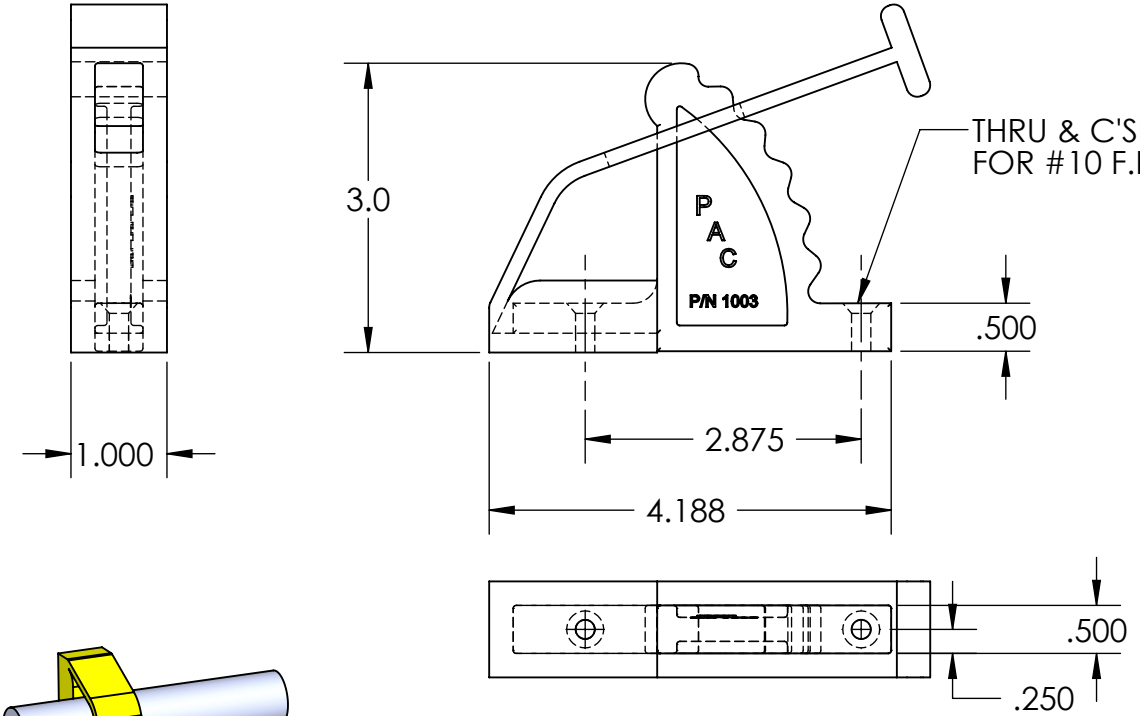

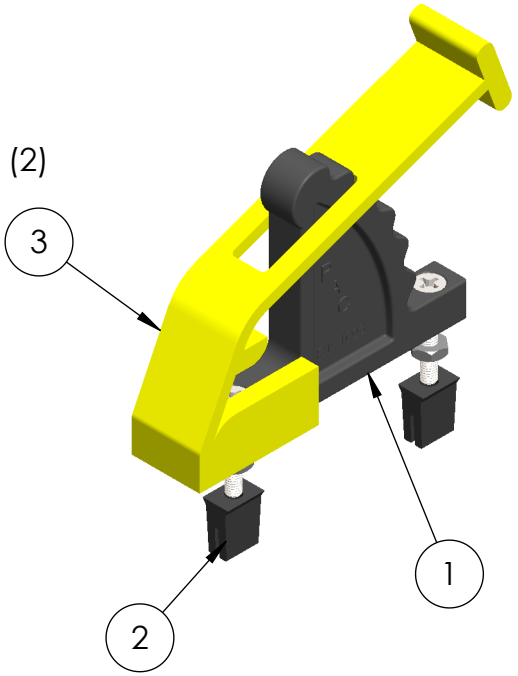

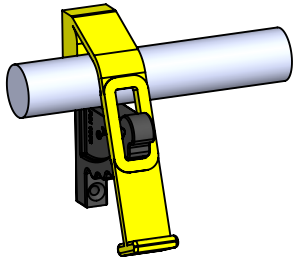

ITEM NO.	PAC P/N	PART NAME	QTY
3	1003 GL	TOOLOK STRAP	1
2	7031	FASTENER KIT	1
1	1003-B	TOOLOK BASE	1

NOTES:

GRIP RANGE: **1/8"-1-1/2"**

INCLUDES MTG HARDWARE TO PAC TRAC AND THROUGH MOUNTING

AVAILABLE WITH BLACK STRAP
P/N 1003B

PERFORMANCE ADVANTAGE COMPANY

TOLERANCES UNLESS OTHERWISE SPECIFIED
.X=±.03
.XX=±.010
.XXX=±.005
.XXXX=±0.0005
ANGLES ±0.5 °
FRACTIONAL ±1/64

THIRD ANGLE PROJECTION

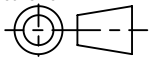

COLOR

	NAME	DATE
DRAWN BY	JIM GONZALEZ	5/27/2010
APPR. BY		
MFG BY		
MFG. P/N		
ENG APPR.		
MATERIAL		
ALT. MATERIAL		
FINISH		

THE INFORMATION CONTAINED IN THIS DRAWING IS THE SOLE PROPERTY OF **PERFORMANCE ADVANTAGE CO.** ANY REPRODUCTION IN PART OR AS A WHOLE WITHOUT THE WRITTEN PERMISSION OF PERFORMANCE ADVANTAGE CO. IS PROHIBITED.

TITLE:

TOOLOK

PART NUMBER
1003

REV

SCALE: 1:2

SHEET 1 OF 1